V10 PRO

Multi-function Car Jump Starter

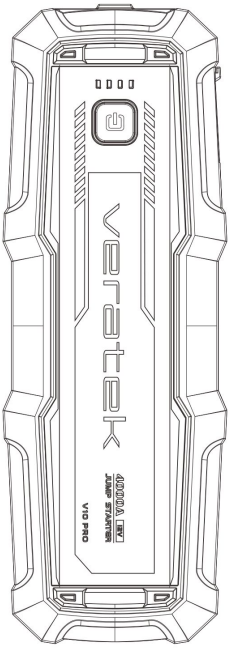

User Manual

Getting Started

Welcome, and thank you for choosing Veratek! Read this manual and follow the instructions to become familiar with your product and enjoy smooth, efficient operation.

Product images may differ slightly from the actual item. When in doubt, refer to the product itself for accurate details.

Jump Starter Diagram

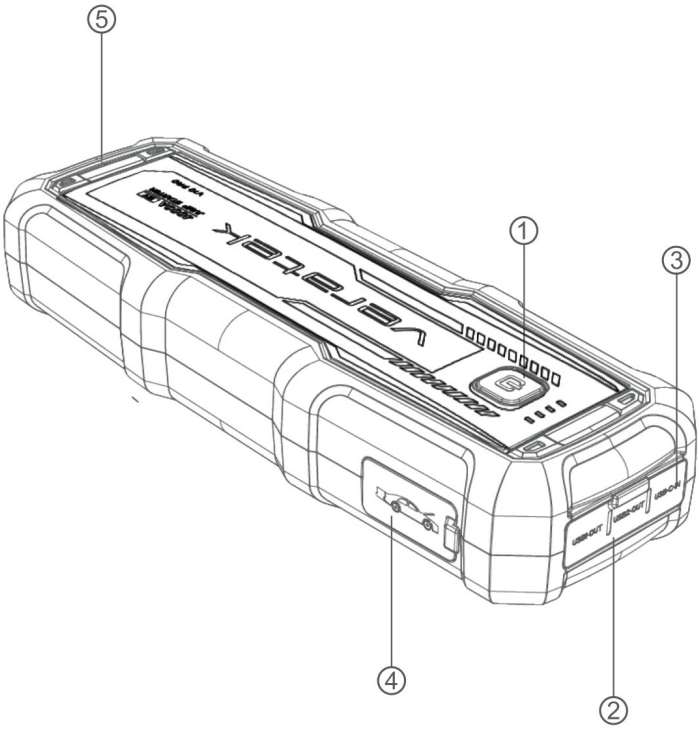

1. Power button

2. USB1/2: QC 18 W (5 V ⎓ 3 A / 9 V ⎓ 2 A / 12 V ⎓ 1.5 A)

3. USB-C input: QC 18 W (5 V ⎓ 3 A / 9 V ⎓ 2 A)

4. EC5 port

5. LED flashlight

Specifications

Battery capacity

24,000 mAh / 88 Wh

Life span

1,000 cycles

Vehicle battery voltage

12 V

Engine size

Gasoline up to 10.0 L / Diesel up to 8.0 L

USB-C input

QC 18 W (5 V ⎓ 3 A / 9 V ⎓ 2 A)

Specifications

USB-A output 1/2

QC 18 W (5 V ⎓ 3 A / 9 V ⎓ 2 A / 12 V ⎓ 1.5 A)

Peak current

4,000 A

Operating temperature

-10°C - 50°C (14°F - 122°F)

Warranty

12 months from the date of purchase. The warranty is void if the product is damaged by accident, mishandling, or failure to follow the instructions.

Maintenance

Charge once every 3-6 months.

Charge Your Jump Starter

AC Adapter Charging

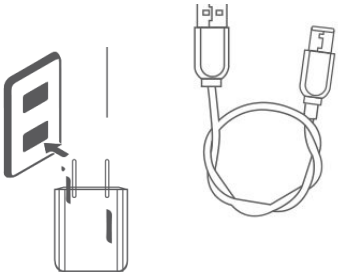

AC adapter (not included)

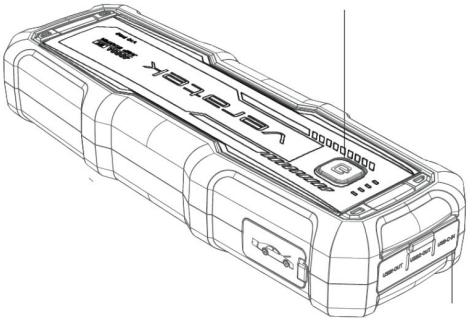

Charging indicator / Input

1. Connect the jump starter to the included USB-A to USB-C cable.

2. Connect the cable to an AC adapter (not included).

3. Plug the AC adapter into a power source.

Charge Your Jump Starter

Car Charger Charging

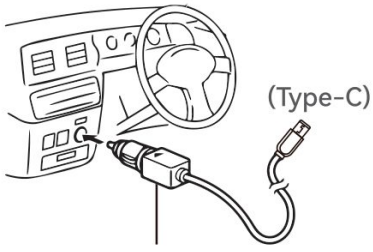

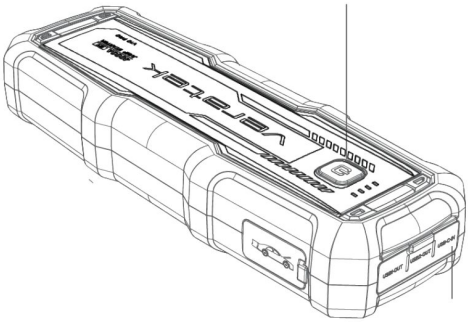

Car charger / USB-C

Charging indicator / Input

1. Connect the charging cable to the jump starter input port.

2. Plug the included car charger into the car’s 12 V port.

Jump Starting Your Vehicle

For 12 V automotive batteries; gasoline engines up to 10.0 L and diesel engines up to 8.0 L.

- Do not use on higher-voltage vehicles or non-standard batteries.
- If the engine does not start, wait 1 minute before retrying so the jump starter can cool.
- Do not attempt more than three consecutive starts; this may damage the device.
- For a battery below 2 V, use Force Start Mode.
- If the vehicle still will not start, check for mechanical or electrical faults.

Before You Start

Turn on the jump starter and make sure it is over 30% charged.

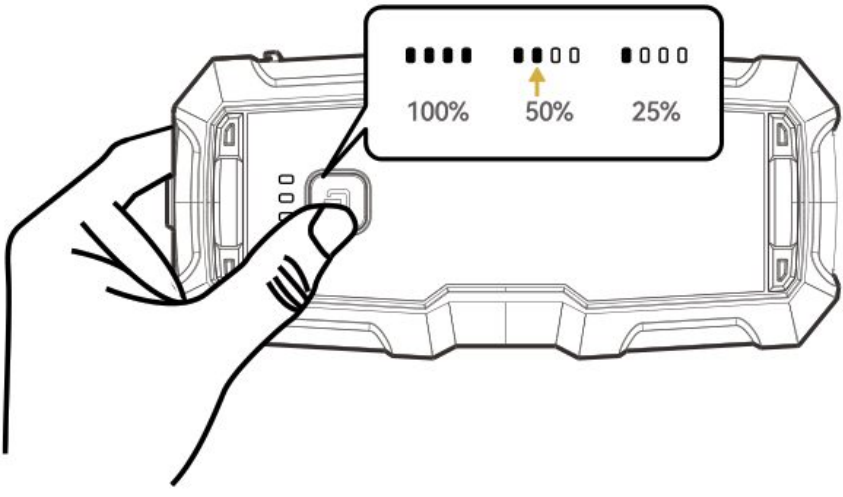

Below 30% charge, it may not be able to start your engine.

Normal Start Mode

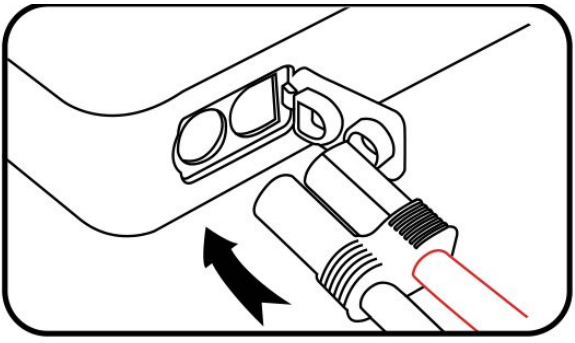

1. Power on the jump starter. Insert the EC5 jumper cable and ensure it locks firmly into the EC5 port.

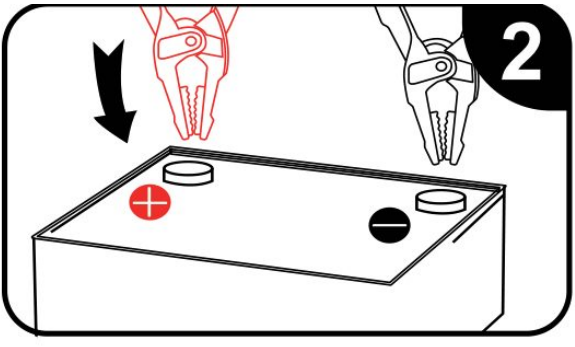

2. Connect the clamps correctly: red to positive (+), black to negative (-).

Normal Start Mode

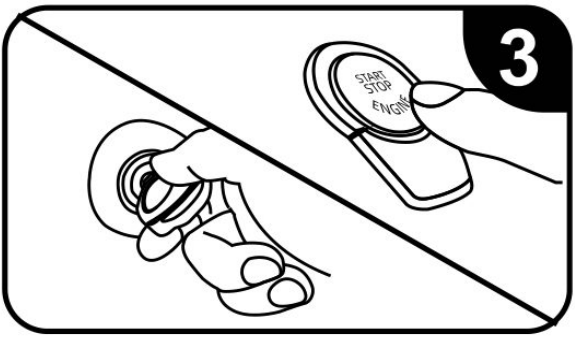

3. Start the engine within 30 seconds after the indicator turns green.

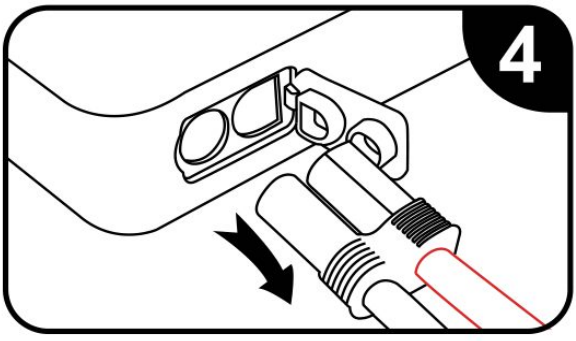

4. Remove the EC5 cable from the jump starter, then remove the clamps from the battery.

Force Start Mode (Car Battery Below 2 V)

Ensure the positive and negative clamps are connected to the correct (+ / -) battery terminals.

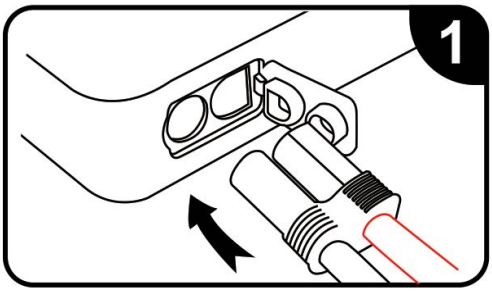

1. Insert the cable into the EC5 port.

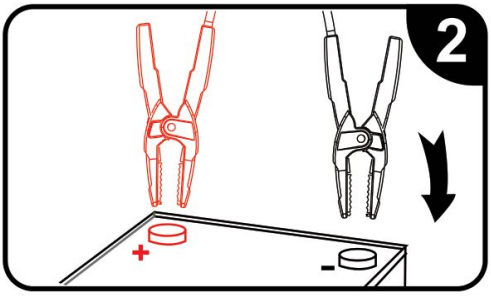

2. Connect the clamps firmly to the car battery.

Force Start Mode (Car Battery Below 2 V)

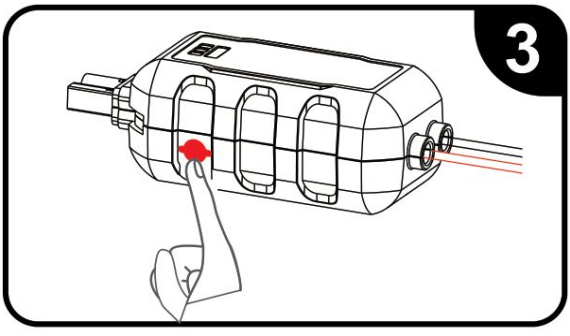

3. Hold the red key for 3 seconds until the indicator turns green.

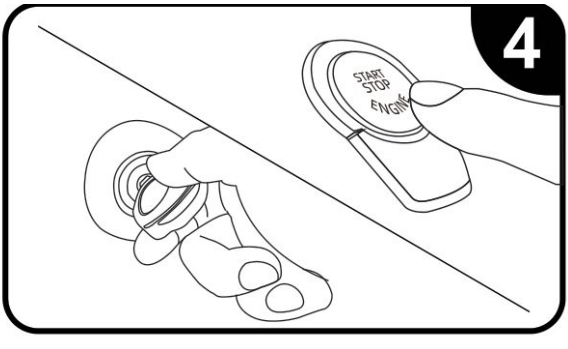

4. Start the engine within 30 seconds after the indicator turns green.

Force Start Mode (Car Battery Below 2 V)

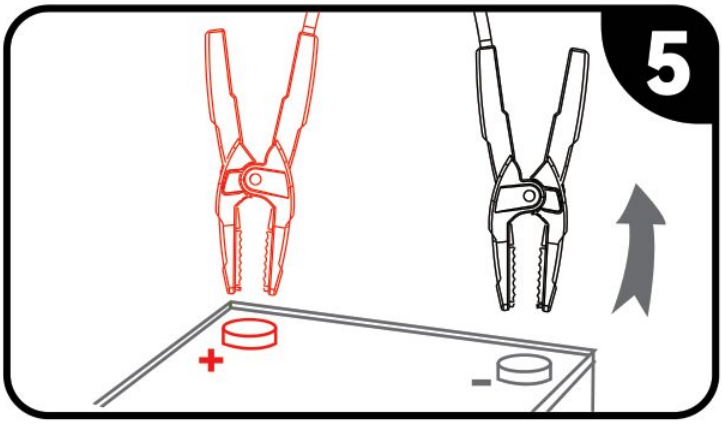

5. Remove the jumper cable before disconnecting it from the car battery.

Ensure the positive and negative clamps are connected to the correct (+ / -) battery terminals.

Battery Clamp Light Indicators

LC - Low capacity

Charge the jump starter.

RC - Reverse connection

Reverse the clamps.

HT - High temperature

Wait 5 minutes before starting the car.

⚠ Never use these battery clamps in an environment filled with flammable gas.

EC5 Cable Indicator Lights

Blue light - Standby

Plug the jumper cable into the EC5 port; the blue light turns on.

Green light - Ready to jump start

Connect the EC5 jumper cables to the battery; the green light turns on.

Protection Features

These safety features protect you and your vehicle. Use this guide to understand a triggered protection and the required action.

Reverse connection

Clamps are on the wrong terminals; the RC red light turns on.

Swap the clamps so positive (+) and negative (-) match the battery.

High temperature

The unit is overheating; the HT red light turns on and a buzzer sounds.

Let it cool. It recovers automatically when temperature returns to normal.

Protection Features

Start timeout

If the engine is not started within about 40 seconds, the blue light comes on and the unit enters standby.

Disconnect the clamps, reconnect them, and restart the jump-start process.

Low input voltage

Below 13.5 V input, the LC red light turns on and a long alarm sounds.

Recharge the jump starter before using it again.

Protection Features

Short circuit

A short circuit is detected. Output is disabled for safety.

Ensure the clamps are securely and correctly connected, then try again.

Using as a Power Bank

The jump starter also works as a high-capacity power bank. Dual USB outputs support two devices simultaneously with 5 V / 9 V / 12 V Quick Charge, charging phones, tablets, and other devices up to 75% faster than a standard charger.

A USB-A to USB-C cable is included. Charging a second device requires another compatible cable (not included).

USB Power Supply

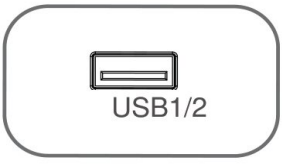

1. Connect the USB end of your cable to a USB output port.

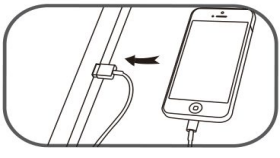

2. Connect the other end of each cable to your phone, tablet, or other device.

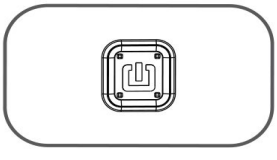

3. Press the jump starter’s power button. Charging begins automatically.

LED Flashlight

The built-in LED flashlight offers emergency and utility lighting modes.

Turning On and Off

- To turn it on, hold the power button for 3 seconds. The battery indicators also light up.
- To turn it off completely, hold the power button again for 3 seconds.
- If no device is connected, the unit shuts off automatically after a short time to save power.

Lighting Modes and Battery Life

While the flashlight is on, briefly press the power button to cycle through the modes.

1. Lighting - steady white light

2. SOS - flashes SOS in Morse code

3. Strobe - rapidly flashing light

To turn the flashlight off from any mode, hold the power button for 3 seconds.

Fully charged, the flashlight provides more than 35 hours of continuous use.

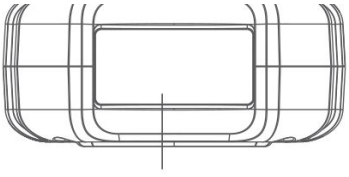

LED flashlight

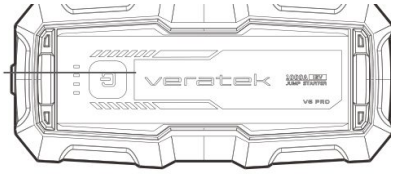

Power button

Safety Warnings

1. Never short-circuit the clamps by joining the red and black cables.

2. Operate only at normal temperatures. Avoid humid, hot, or flammable environments.

3. Stop use immediately if the device swells, leaks, or emits a strange odor.

4. Wait 30 seconds to 1 minute between engine-start attempts. Do not attempt continuous starts.

5. Store in a dry place, away from damp conditions and corrosive materials.

Safety Warnings

6. Never disassemble the unit.

7. Connect the clamps correctly; do not reverse positive (+) and negative (-). Built-in protection prevents damage, but correct use is important.

8. Keep out of reach of children.

9. Avoid use at low battery level. Do not use with only one battery indicator light showing.

10. Fully charge before first use. At least 3 hours of initial charging is recommended.

Caution

- Do not drop, strike, or crush the device or accessories.
- Unplug all cables after use.
- Keep away from fire and high heat. Stop use if the battery gets hot or changes color.
- Before jump starting, ensure the cable is firmly attached.
- Wait at least 30 seconds between jump-start attempts. Avoid repeated starts.
- If the engine does not start after 3 attempts, stop using the product and check for problems.

Caution

- This product does not replace your vehicle’s battery.
- When attaching, connect black (-) first; when removing, disconnect red (+) last.
- Never expose to water or use in damp or humid conditions.
- Recharge at least once every 3 months to maintain battery health.
- Dispose of according to local laws and environmental guidelines.

Built-in Safety Features

Short-circuit protection

Automatically disables output when a short is detected.

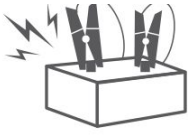

Reverse-connection protection

Prevents operation if the clamps are connected incorrectly.

Spark-proof design

Engineered to prevent sparks during connection.

10 Safety Protections

Overcharge protection

Overcurrent protection

Short-circuit protection

Reverse-polarity protection

Low-temperature protection

High-temperature protection

Overvoltage protection

Overload protection

Reverse-charge protection

Spark-proof protection

Designed in the USA

Made in China